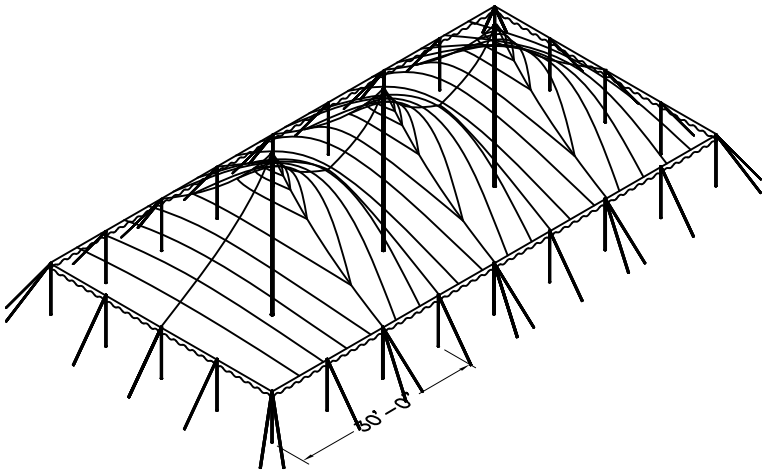

ISOMETRIC VIEW

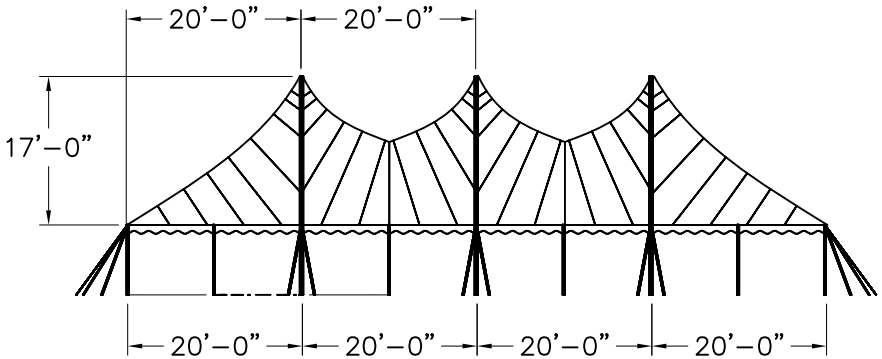

SIDE VIEW

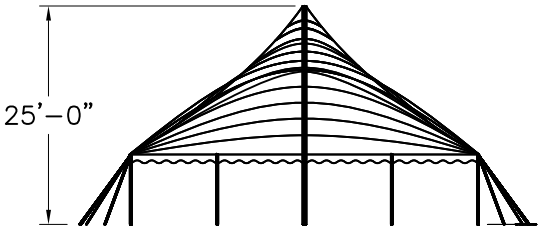

FRONT VIEW

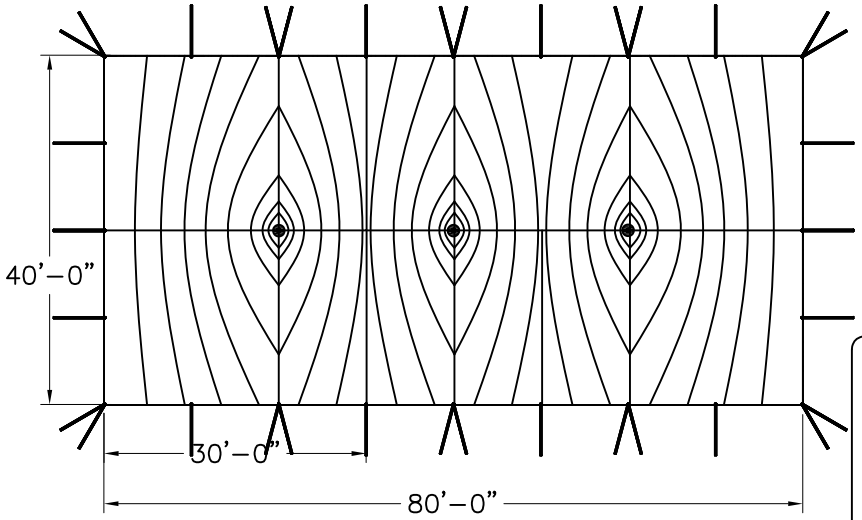

PLAN VIEW

ALL DATA AND INFORMATION CONTAINED IN OR DISCLOSED BY THIS DOCUMENT IS CONFIDENTIAL AND PROPRIETARY INFORMATION OF AZTEC TENTS AND ALL RIGHTS THEREIN ARE EXPRESSLY RESERVED. BY ACCEPTING THIS MATERIAL THE RECIPIENT AGREES THAT THIS MATERIAL AND INFORMATION CONTAINED THEREIN IS HELD IN CONFIDENCE AND IN TRUST AND WILL NOT BE COPIED, REPRODUCED WHOLE OR IN PART, NOR ITS CONTENTS REVEALED IN ANY MANOR TO OTHERS, EXCEPT TO MEET THE SPECIFIC PURPOSE FOR WHICH IT WAS DELIVERED.

AZTEC TENTS
DESIGN & PRODUCTION
2665 COLUMBIA ST. TORRANCE, CA. 90503
(800) 228-3687 - FAX (310) 381-0722

PRODUCT
SERIES 2200 POLE TENT
40'W X 80'L X 20 MIDDLES
PART NUMBER: ZXXXXXXX

REVISION HISTORY

REV:	DESCRIPTION:	BY:	DATE:

CONFIDENTIAL

ENGINEER: N/A	DATE: 4/18/2016
PAGE: 1 OF 1	DRAWN: HUGO.R

K:\cad files\Products\Pole Tent\Series 2200\40x\Single 40X80 S2200.dwg, 3/21/2018 6:00:29 PM, Adobe PDF